ELITE ROBOTS

CS63 | 6-axis Collaborative Robot

CS SERIES

3kg
Payload

624mm
Radius

±0.02mm
Repeatability

2.0m/s
Max TCP Speed

ELITE ROBOTS

CS63

CS SERIES

Robotic Arm

Payload		3kg
Radius		624mm
Repeatability		±0.02mm
Axis		6
Joints rotation	J1-J6	±360°
Joints speed	J1-J2	180°/s
	J3-J6	230°/s
Max TCP Speed		2.0m/s
IP rating		IP65 (IP68 upgradable)
Operating Temperature range		0-50 ℃
Relative humidity		<90% (non-condensing)
Typical power usage		185w
Mounting		Any angle
Tool I/O connector		M8, 8pin
Tool I/O ports		4 config. DI, 4 config. DO; 1 AI, 1 AO
Tool I/O power supply		12V / 24V, 3A, 2A, 1A
Tool I/O communication		RS485
Footprint		Ø128mm
Weight		15kg
Material		Aluminum, Steel
Cable length		5.5m
Certifications		EN ISO 13849-1, PLd Category 3, EN ISO 10218-1

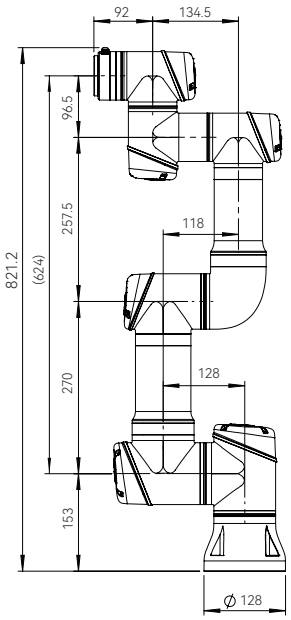

CS63 external dimensional drawing

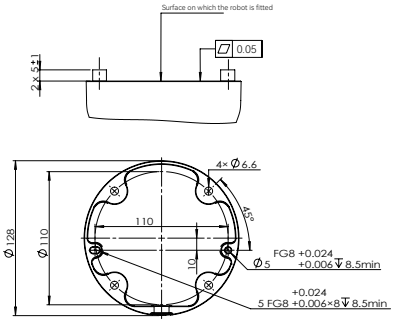

CS63 base top view

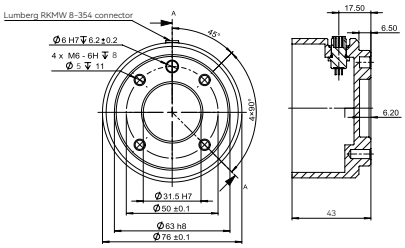

CS63 end flange

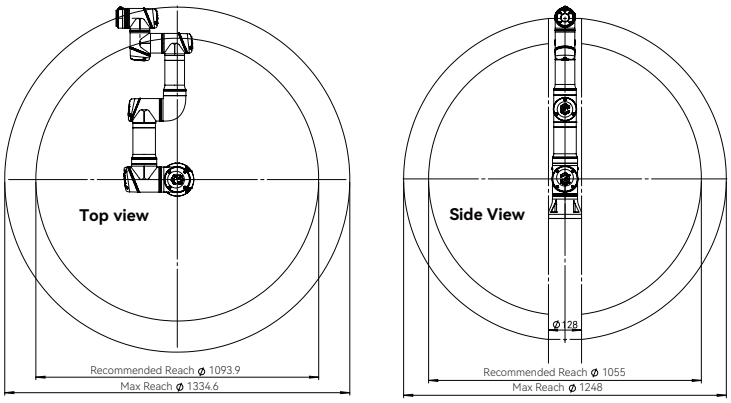

CS63 working range diagram

Teach-Pendant

Size	301mm x 232mm x 54mm
Screen display size	12.1"
Resolution	1280 x 800 pixels
Material	Aluminum, Plastic
Weight	2.1 kg
Cable length	5.5 m
IP rating	IP54
Input method	Capacitive touch-screen

Controller

Size	505mm x 432mm x 257mm
Material	Aluminum, Steel
IP rating	IP54
I/O ports	24 DI (8 config.), 24 DO (8 config.); 2 AI, 2 AO
I/O power supply	24V; 3A (internal), 6A (external)
Communication ports	3 Ethernet ports, 1 RS485, 1 MiniDP, 1 USB 2.0, 1 USB 3.0
Communication protocols	TCP/IP, MODBUS TCP/RTU, EtherNet/IP, Profinet, OPCUA
Power source	100-240 VAC, 50-60 Hz

eliterobots.com
info@elibot.com
Elite Robots
@EliteRobotsOfficial